SAKHA JUNIOR SCIENCE ACADEMY

RUSSIA

Author: Artem Mardin, V.P.Larionov Physics and technical lyceum

Tutor: Andrei Petrov and Timur Illarionov, SJSA

CANSAT SPIN STABILIZATION MECHANISM DEVELOPMENT

Abstract

Flight data from previous CanSat launches revealed high angular velocities along the vertical axis during parachute descent. A novel aerodynamic stabilization system was designed to decrease angular velocity. The system uses deployable fins with servomotors to provide control authority. Fin position was calculated from onboard gyroscope data using a PID regulator and a moving-average filter. After assembly and initial testing, the system was flight-proven by dropping it from a drone with and without stabilization enabled.

Keywords: CanSat, aerodynamics, stabilization, PID, control systems

Introduction

Recent advances in space exploration made satellites and spacecraft, especially CanSat - a can-size satellite, designing and engineering an interesting subject study for students and CanSats in particular. CanSats are the most affordable satellite format. [1]

The Flight data analysis obtained from one of the CanSat launches showed high angular velocities along the vertical axis. It required a novel stabilization system design to compensate for this rotation.

This study developed and tested a novel aerodynamic stabilization system design suitable for installation on CanSat vehicles.

Test results

Figures 9 and 10 show graphs of angular velocity during descent without and with the stabilization system active.

In the first case, the separation from the drone occurred at the 109th second of flight. Y-axis angular velocity (vertical axis of the CanSat) reached 500 degrees/sec and did not decrease until landing at 122nd second.

In the second case, separation from the drone occurred after 102 seconds. Angular velocity in the descent phase did not exceed 250 degrees/sec. The aircraft landed in the snow after 116 seconds of flight. In both drop tests, the average descent rate was 8m/s.

2-times decrease in angular velocity along the vertical axis was observed during the tests.

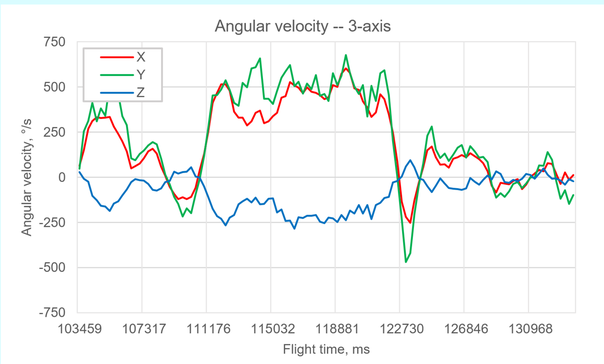

Figure 7. Angular velocity (no stabilization)

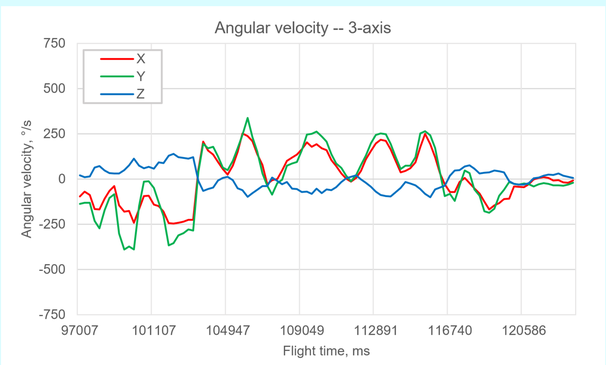

Figure 8. Angular velocity (stabilization active)

CanSat platform description

CanSat stands for "satellite in a can". The name implies that the payload must fit inside a can (typically, a regular soda can). Due to its small size, it has a minimum construction cost.

This study made a design choice per the Moscow State University Aerospace Engineering School CanSats launching competition guidelines.

The following devices were installed in the satellite:

1. GY-801 board with HMC5883 magnetometer, ADXL345 accelerometer, L3G4200D gyroscope, BMP180 barometer;
2. Servo actuator to deploy the parachute system;
3. Arduino Micro to control the satellite.

The satellite body was made of a cardboard tube approximately 200 mm high, 76 mm in diameter . Devices were wired to each other using a soldering breadboard. Figure 1 shows the assembled device, figure 2 shows the scheme of onboard systems.

The satellite was mounted on a rocket and launched to up to 350 meters [2]. After separation from the rocket, the satellite descended on its parachute. During the entire flight, data were recorded on an SD-card, telemetry was also transmitted using radio.

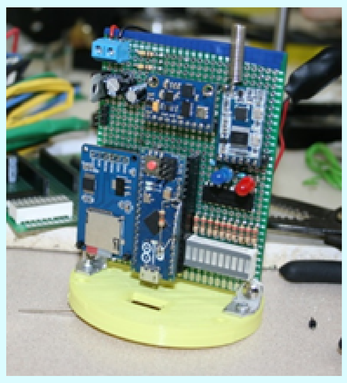

Figure 1. Assembled satellite

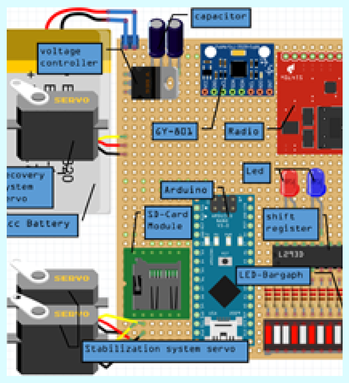

Figure 2. Onboard electronics diagram

Testing

To work out the stabilization algorithm, we used a simple test bench. The same modules are used in the test bench as onboard the CanSat, except those not required for the stabilization system. Figure 5 shows the test bench setup.

The satellite was attached to a drone, brought to an altitude of 150 meters, then unhooked and descended by parachute. Two flights were performed: one without the stabilization system and the second with the system. The angular velocity data was transmitted via a radio channel. In addition, there was a camera onboard. The angular velocity data allows us to evaluate the effectiveness of the developed system.

In addition, we bought a system analysis. It shows us the maximum stabilization for every degree.

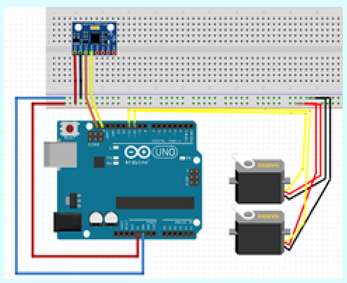

Figure 3. Test bench diagram made in Fritzing

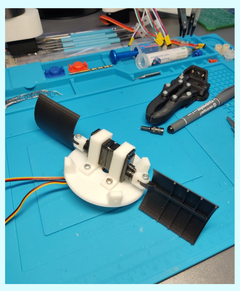

Figure 4. Completed system

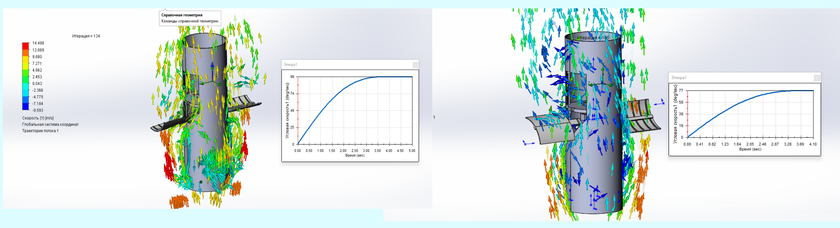

Figure 5. Analized information about stabilization

Conclusion

We can make the following conclusions from the results:

1. The designed system provides stabilization along the vertical axis.
2. Overall efficiency can be improved by modifying the design and software.
3. The testing methodology needs to be improved.

The designed system has proven its flight performance and is suitable for use on CanSat satellites.

Stabilization system design

Of the available options, such as a flywheel or the use of compressed air, the method of turning with unique aerodynamic fins was chosen as the least energy-consuming.

Fins were two body sections that opened from the upper part of the vehicle from opposing sides. The fins followed the shape of the satellite body. The deflecting moment was created by the airflow coming down.

The fin deployment mechanism used a taut thread and a spring. After the deployment of the parachute system, the thread fastening the fins was burned with a nichrome wire. Springs then flipped the fins to the sides, and then the system began to work. Figure 4 shows fins in half-deployed and fully deployed states.

The fins servomotors designed for a load of 13 kg-cm were used to control the movement, which was considered sufficient. These servomotors were connected to pins D11 and D10 of the Arduino.

The software to control the stabilization system was written in C++. It received angular velocities in degrees per second from the gyroscope, passed them through a moving-average filter and calculated fin deflection angle. The software was uploaded on the testbench, and the PID coefficients were chosen empirically. Source code was published on GitHub (https://github.com/gfb123shinigami). For better performance, the parachute was fixed on a freely rotating mount. During the satellite's descent, the parachute slings got tangled, creating unnecessary forces. All components are built in SolidWorks and later printed on a 3D printer.

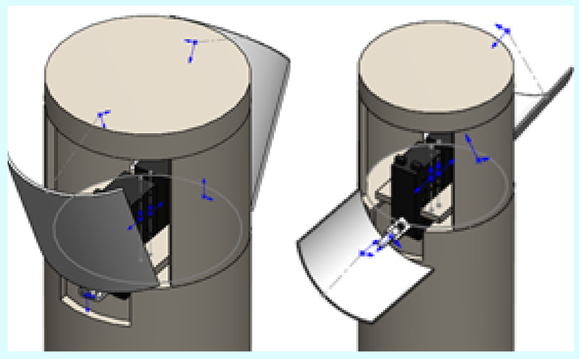

Figure 6. Stabilization system

Discussion

The stabilization system allowed us to reduce the angular velocity of the vehicle from 500 to 250 degrees/sec, which, nevertheless, is not enough to operate advanced payloads on the CanSat. Also, Figure 10 shows angular velocity oscillation in the region of 125 degrees/sec.

To increase the efficiency of the stabilization system and to eliminate the mentioned problems, the following solutions are possible:

1. Careful PID controller tuning.
2. Calibrating the gyroscope and changing the data filtering algorithm.
3. Increasing the area of aerodynamic fins.
4. Installation of faster servos.

These changes will eliminate angular velocity oscillations and potentially stop the vehicle rotation completely. However, they will not compensate for wind gusts and other random environmental effects due to the high reaction time of the system.

After these changes are made, the system will be re-tested. We also plan to run simulations to determine the optimal area of the fins and to tune PID coefficients.

Acknowledgements

I want to express my gratitude to Dr Vasilii Klimovich Pavlov, the Sakha Junior Science Academy staff and the Kvantorium for providing the equipment for the scientific project, to Mr Yury Romanov and Mr Andrei Petrov for project supervision.

Literature

1) CanSat format description - https://en.wikipedia.org/wiki/CanSat
2) MSU Aerospace Engineering school guidelines - http://roscansat.com
2) Physics 8th grade / Ed. A.V. Peryshkin. - 4th ed., revised. Vertekal, 2016. - 240 p.
4) What is a PID controller and how to work with it? - https://alexgyver.ru/lessons/pid/